| 도면번호 DWG. NO. | |
|---|---|

| NO. | | DESCRIPTIONS | MAT'L | Q'TY | WEIGHT KG. UNIT | WEIGHT KG. TOTAL | REMARKS |
|---|---|---|---|---|---|---|---|
| | 1 | GEARED MOTOR | PUR | 1 | | – | 5.5KWx4P(i=1/222.1) |
| | 2 | WIRE DRUM | SS400 | 1 | | – | P.C.D ø408 |
| | 3 | BEARING HOUSING | – | 1 | | – | |
| | 4 | WIRE ROPE | | 1 | | – | ø14 |

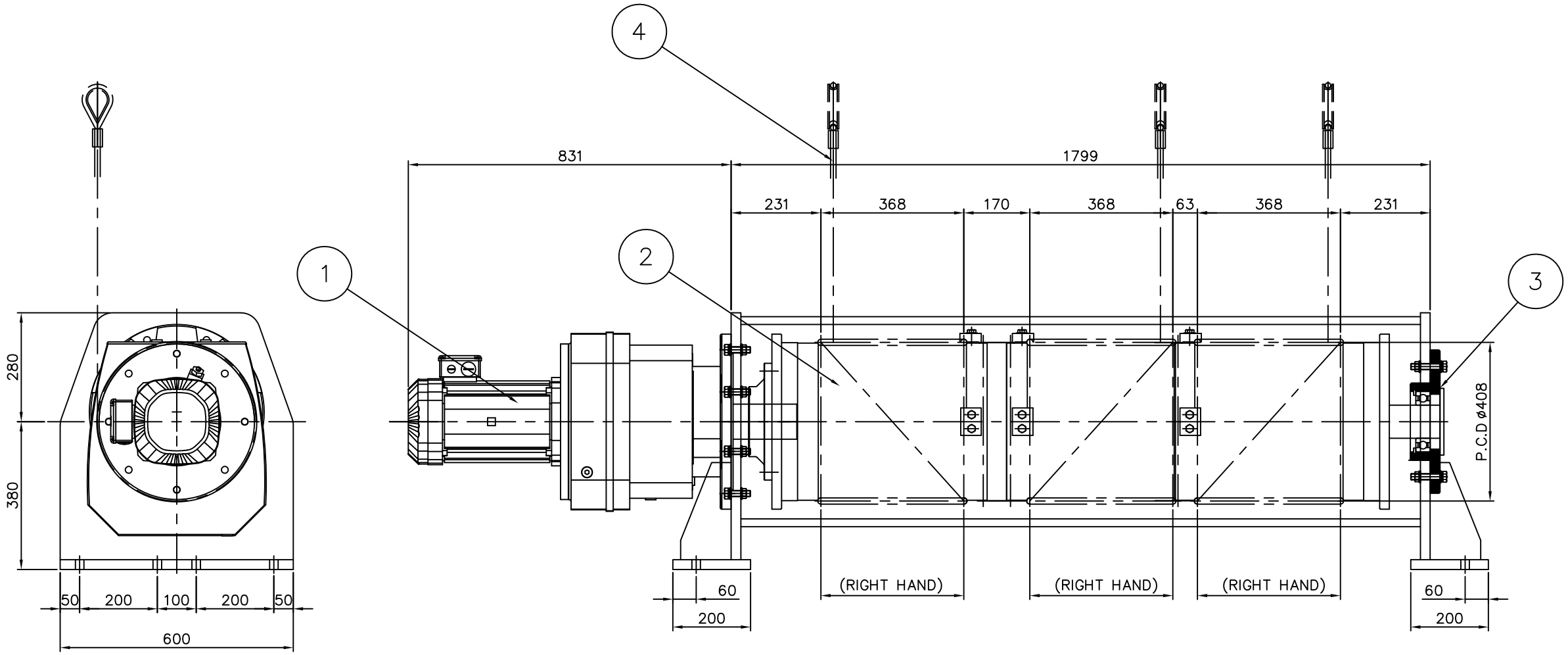


# MODEL : LTK-SW-3T

| SPECIFICATION | | |
|---|---|---|
| RATED LOAD | | 3,000 KG |
| TESTING LOAD | | 3.300 KG |
| LIFT | | 22 M |
| WIRE ROPE | | 19x7(비자전성) ø14x3 FALLS |
| HOISTING | SPEED | 10 M/MIN |
| | MOTOR | 5.5 kW x 4P |
| RATING | | 30 MIN |
| POWER SOURCE | | AC ø3 220,380,440V 60Hz |

A2(420x594m/m) CONT NO.